NUPI INDUSTRIE ITALIANE S.p.A.

ENVIRONMENTAL PRODUCT DECLARATION

Product names:

PLASTIC PIPING SYSTEMS FOR LIQUID FUELS AND FUEL VAPOURS

TYPE SMARTFLEX AND SUPERSMARTFLEX

Site Plants:

Imola (BO)

Busto Arsizio (VA)

in compliance with ISO 14025 and EN 15804:2012+A1:2013

Program Operator	EPDItaly
Publisher	EPDItaly

Declaration Number	2021PC1939
Registration Number	EPDITALY0133

Issue Date	13/01/2021
Valid to	13/01/2026

General information

EPD OWNER:	Nupi Industrie Italiane S.p.A., Via Stefano Ferrario n. 8, Z.I. Sud-Ovest - 21052 Busto Arsizio (VA) Italia
PLANT INVOLVED in the declaration:	Busto Arsizio: Via Stefano Ferrario n. 8, Z.I. Sud-Ovest - 21052 Busto Arsizio (VA) Italy Imola: Via Colombarotto n. 58 - 40026 Imola (BO) - Italy
SCOPE OF APPLICATION:	This Environmental Product Declaration (EPD) is valid for SMARTFLEX and SUPERSMARTFLEX products. The production facilities are in Imola (BO) and Busto Arsizio (VA). The type of declaration is related to an average product produced partly in Imola (pipe) and partly in Busto Arsizio (fittings). The life cycle assessment is representative for the product introduced in the declaration for the given system boundaries.
PROGRAM OPERATOR:	EPDITALY, via Gaetano De Castillia 10, 20124 Milano, Italia.
INDIPENDENT CHECK:	This declaration has been developed referring to EPDItaly, following the General Programme Instruction; further information and the document itself are available at: www.epditaly.it. EPD document valid within the following geographical area: Italy and other countries according to sales market conditions. CEN standard EN 15804 served as the core PCR (PCR ICMQ-001/15 rev 2.1). PCR review was conducted by Daniele Pace. Contact via info@epditaly.it Independent verification of the declaration and data, according to EN ISO 14025:2010. Third party verifier: ICMQ SpA, via De Castillia, 10 20124 Milano (www.icmq.it) ☐EPD process certification (Internal)☑ EPD verification (External) ***Accredited by: Accredia***
CPC CODE:	3632 - Tubes, pipes and hoses, and fittings therefor, of plastics
CORPORATE CONTACT:	info@nupinet.com
TECHNICAL SUPPORT:	**Sphera (previously thinkstep)** **https:// sphera.com/**
COMPARABILITY:	Environmental statements published within the same product category, but from different programs, may not be comparable. In particular, EPDs of construction products may not be comparable if they do not comply with EN 15804.

ACCOUNTABILITY:	Nupi Industrie Italiane S.p.A relieves EPDItaly from any non-compliance with environmental legislation. The holder of the declaration will be responsible for the information and supporting evidence; EPDItaly declines all responsibility for the manufacturer's information, data and results of the life cycle assessment.
REFERENCE DOCUMENT:	This declaration has been developed following the General Programme Instruction document of EPDItaly, available at www.epditaly.it.
PRODUCT CATEGORY RULES (PCR):	PCR ICMQ-001/15 rev 2.1 EN 15804 is the framework reference for PCRs.

Company

In October 2015, Nupi Industrie Italiane S.p.A. took over Nupigeco S.p.A.
The name change brings with it the experience of an "all-Italian" company that exports its products worldwide.
Nupigeco S.p.A. was founded on October 1st 2008 by the merger of two of our companies, NUPI S.p.A. and Geco System S.p.A. - both founded more than 45 years ago. Combining their many years of experience and constant growth, the two firms decided to create a new flexible and advanced company, ready to play its role to satisfy the demands of the market whilst being environmentally astute.

MISSION

The primary goal of Nupi Industrie Italiane S.p.A. corporate strategy is not only the production of systems that meet performance requirements and comply with the use for which they are intended, but above all general customer satisfaction. Producing better and faster are goals that technology makes more and more compatible.

Nupi Industrie Italiane S.p.A. combines high productivity with high and consistent quality standards while preventing pollution and minimizing the environmental impacts of its operations, making the most efficient use of natural resources and energy. To reduce raw materials wastes, Nupi Industrie italiane S.p.A. re-introduces in its production cycle its own reprocessed material.

Company Certifications

Nupi Industrie Italiane S.p.A. submits its management and production systems to external audits performed by third party certification bodies. The external audit consists of inspections carried out at given intervals.
Audit frequency depends on the procedure established by the specific standard and by each certification body. Nupi Industrie Italiane S.p.A. is certified in compliance with the standards for quality (EN ISO 9001), environment (EN ISO 14001) and Health and Safety of workers (ISO 45001).

UNI EN ISO 9001
UNI EN ISO 14001
ISO 45001

Product Certifications

NUPI products are of high quality, complying with regulations and conforming to the most stringent standards and certifications schemes (according to EN 14125, UL 971, KIWA BRL K552 etc…) from around the globe (the full updated list is available on the website: www.nupiindustrieitaliane.com).

Goal and scope of EPD

The entire life cycle of the product is considered (Type of EPD: cradle to grave) and the modules described below are declared in this EPD:

*Modules **A1-A3** include those processes that provide energy and material input for the system (A1), transport up to the factory gate of the plant (A2), manufacturing processes as well as waste processing and emissions to air (A3).*

*Module **A4** includes the transport from the production site to the customer or to the point of installation of the products.*

*Module **A5** considers all piping systems installation steps to build the construction site (like auxiliaries and mechanical energy consumption) also packaging waste processing (recycling, incineration, disposal). Credits from energy substitution are declared in module D. During this phase a pipe leftover of 2% has been considered.*

*Module **B1** considers the use of the installed product. During the use of plastic piping systems, a scenario of zero impact is considered.*

*Module **B2** includes the maintenance of the product. A scenario of zero impact is considered.*

*Modules **B3-B4-B5** are related to the repair, replacement and refurbishment of the products. If the products are properly installed no repair, replacement or refurbishment processes are necessary. A scenario of zero impact is then considered.*

*Modules **B6-B7** consider energy use and operational water to operate the piping system. No operational energy or water use are considered. A scenario of zero impact is then considered.*

*Module **C1** considers deconstruction, including dismantling or demolition of the product from the construction site. The energy consumption related to shredding activities is considered.*

*Module **C2** considers transportation of the discarded piping system to a recycling or disposal process.*

*Module **C3** considers waste processing for products recycling and incineration.*

*Module **C4** includes all waste disposal processes, including pre-treatment and management of the disposal site.*

*Module **D** includes benefits from all net flows in the end-of-life stage that leave the product boundary system after having passed the end-of-waste stage. Benefits from packaging incineration (electricity and thermal energy) are declared within module D.*

PRODUCT STAGE			CONSTRUCTION PROCESS STAGE		USE STAGE							END OF LIFE STAGE				BENEFITS AND LOADS BEYOND THE SYSTEM BOUNDARIES
Raw material supply	Transport	Manufacturing	Transport from the gate to the site	Assembly	Use	Maintenance	Repair	Replacement	Refurbishment	Operational energy use	Operational water use	De-construction demolition	Transport	Waste processing	Disposal	Reuse-Recovery-Recycling-potential
A1	**A2**	**A3**	**A4**	**A5**	**B1**	**B2**	**B3**	**B4**	**B5**	**B6**	**B7**	**C1**	**C2**	**C3**	**C4**	**D**
X	X	X	X	X	X	X	X	X	X	X	X	X	X	X	X	X

X = modules included in the study

The type of EPD is “cradle to grave” and it is an average EPD for the product SMARTFLEX and SUPERSMARTFLEX produced in NUPI INDUSTRIE ITALIANE S.p.A. plants located in Imola (BO) and Busto Arsizio (VA) and sold worldwide. All data refer to the 2019 production and sales.

According to the PCR ICMQ-001/15 rev. 2.1 the LCA study and the relative EPD, is “cradle to grave”. Modules included are A1, A2, A3, A4, A5, B, C and D. All manufacturing activities and packaging/auxiliary’s production are in module A3, while energy production and input materials are in A1. Transport to clients (A4) and installation (A5) are included together with end of life scenarios (benefits and loads included according to D module).

The declaration is 1d (average product from different products and from more than one plant of a specific manufacturer).

The production facilities are in Imola - Bologna (IT) - and Busto Arsizio - Varese (IT). The market range is Worldwide.

Geographical validity: Worldwide

Database: GaBi Database SP40 (2020)

Software: EPD Process Creator, implemented through GaBi professional 9 and GaBi Envision 9.0 software. The identification code of the EPD process tool used is: NUPI EPD Process Tool – V.3 del 10/07/2019 developed by Sphera (previously thinkstep).

EPD realized by means of a validated algorithm:
In 2019 NUPI Industrie Italiane S.p.A. implemented and certified a Process for EPD generation by using an algorithm that has been validated and certified by ICMQ S.p.A., in agreement with EPDItaly’s requirements. The process is based on an automatic data collection from different manufacturing plants that have been integrated, verified and validated in compliance with internal procedures. The validated algorithm allows the automatic calculation of the indicators reported into the current EPD coming from an LCA model implemented into the EPD process tool.

Product description

1.1. Detailed product description

Smartflex and Supersmartflex pipes produced by Nupi Industrie Italiane S.p.A. consists of a range of single and double wall pipes and fittings for the conveyance of fuels in liquid and vapour form, being Supersmartflex specifically designed for US market regulations.

SMARTFLEX and SUPERSMARTFLEX allow the transport of petroleum products, alcohols, alcohol-gasoline mixtures, biofuels and chemicals under pressure.

They are suitable for different types of application such as product lines, filling lines, ventilation lines, vapour recovery lines.

Smartflex and Supersmartflex systems can be used in several installations such as road, motorway and private service stations, harbour and marine service stations (marinas), fuel distribution in airports, fuel storage tanks (deposits) and for generators connections to fuel tanks.

Smartflex and Supersmartflex pipes are multilayer pipes manufactured through a production process called "coextrusion" (contemporary extrusion of various layers of pipe made of different materials).
It combines the excellent mechanical properties of HDPE (High Density Polyethylene) and the low permeability and high chemical resistance of an inner and/or outer layer made of a polymeric material specifically suited to the application. The inner layer (liner) guarantees a barrier impermeable to fuels, an excellent resistance to wearing, a high resistance to long-term pressure and limited head loss. In SMARTFLEX double wall pipes, the secondary pipe is not just a containment conduit, but it is a high-density polyethylene pipe capable of sustaining the pressure or pressure drop of an automated monitoring system. The SMARTFLEX fitting range includes single wall electrofusion fittings, transition fittings, double wall coaxial electrofusion fittings, termination electrofusion fittings, electrofusion and mechanical penetration fittings, mechanical and spigot fittings.

1.2. Production processes description

PIPE EXTRUSION (Imola)

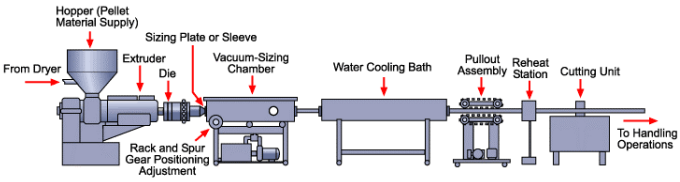

Figure 1 Pipes extrusion process

Nupi Industrie Italiane S.p.A. manufactures both solid wall (monolayer) plastic pipes, in diameter sizes ranging from 14 mm to 250 mm, and coextruded multilayer (from two to five layers) pipes.

The raw materials used to manufacture plastic pipes are supplied in pellets (provided in bulk transporter, octabins or bags), both as natural resin or finished compound. Resin is pneumatically conveyed from the bulk transporters to silos at the plant site. The resin is then transferred from the silos to the pipe extruder by a vacuum transfer system.

The pipe extrusion line consists of the extruder, die, cooling systems, puller, printer, saw and take-off equipment. The function of the extruder is to heat, melt, mix, and convey the material to the die, where it is shaped into a pipe. The extruder is used to heat the raw material and then force the resulting melted polymer through the pipe extrusion die. The pipe extrusion die supports and distributes the homogeneous polymer melt around a solid mandrel, which forms it into an annular shape for solid wall pipe.

The dimensions and tolerances of the pipe are determined and set during the sizing and cooling operation. The sizing operation holds the pipe in its proper dimensions during the cooling of the molten material. During vacuum sizing, the molten material is drawn through a sizing tube or rings while its surface is cooled enough to maintain proper dimensions and a circular form. The outside surface of the pipe is held against the sizing sleeve by vacuum. After the pipe exits the vacuum sizing tank, it is moved through a second vacuum tank or a series of spray or immersion cooling tanks.

The puller must provide the necessary force to pull the pipe through the entire cooling operation. Pipes are marked at specific intervals through ink jet or hot marking with tape machines.

Finished pipes can be coiled (depending to their sizes and physical/mechanical characteristics) or cut in customised straight lengths for handling and shipping convenience. Coiled pipes and straight lengths are then arranged with the proper packaging, ready for the storage, handling and transport phases.

Metal-plastic pipes are manufactured on specifically designed inline equipment integrating all important process steps. They are made up of five layers perfectly joined thanks to an innovative technological process supported by cutting-edge equipment.

The first extruded layer is the PE-RT polyethylene layer that guarantees resistance to high temperatures. The adhesive layer is added to this one to then wrap the aluminium, with different thickness depending on the welded diameter. The aluminium layer makes the pipe malleable and similar to copper. Once a second adhesive layer is applied, the external high-density polyethylene layer is extruded to protect the aluminium, making it resistant to external agents.

Figure 2 Aluminium-plastic pipes extrusion process

FITTINGS INJECTION MOULDING (Busto Arsizio)

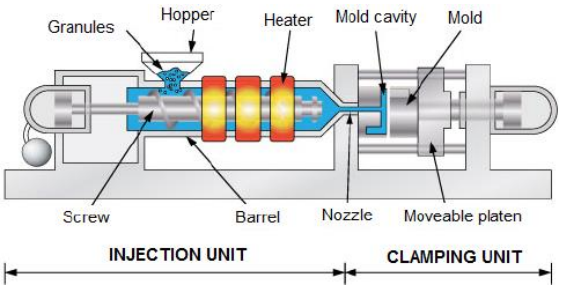

Figure 3 Fittings injection moulding process

Equipment to mould fittings consists of a mould and an injection moulding press. The mould is a split metal block that is machined to form a part shaped cavity in the block. Hollows in the part are created by core pins shaped into the part cavity. The moulded part is created by filling the cavity in the mould block through a filling port, called a gate.

The injection moulding press has two parts; a press to open and close the mould block, and an injection extruder to inject material into the mould block cavity. The injection extruder is similar to a conventional extruder except that, in addition to rotating, the extruder screw also moves lengthwise in the barrel. Injection moulding is a cyclical process. The mould block is closed and the extruder barrel is moved into contact with the mould gate. The screw is rotated and then drawn back, filling the barrel ahead of the screw with material. Screw rotation is stopped, and the screw is rammed forward, injecting molten material into the mould cavity under high pressure. The part in the mould block is cooled by water circulating through the mould block. When the part has solidified, the extruder barrel and mould core pins are retracted, the mould is opened, and the part is ejected.

NUPI Industrie Italiane S.p.A. manufactures a wide range of electrofusion fittings that incorporate a metal wire for the welding process, socket fusion, spigot and transition fittings.

1.3. Technical data

Service Conditions as per EN 14125

Application	Operating pressure bar	Test vacuum bar	Lower test pressure bar	Higher test pressure bar
Primary delivery pipework: positive pressure	+3,5	—	+5,0 ± 0,1	+30,0 ± 1,0
Primary delivery pipework: vacuum suction including siphons	-0,6	-0,9 ± 0,05	+5,0 ± 0,1	
Vents and vapour recovery pipework	1,0	-0,9 ± 0,05	+5,0 ± 0,1	
Fill pipework	1,0	—	+5,0 ± 0,1	
Secondary containment Type CP1 and CS1	+0,5	—	+1,0 ± 0,02	+5,0 ± 0,1
Secondary containment Type CP2 and CS2	-0,5 to +4,5	-0,6 ± 0,05	+5,0 ± 0,1	+10 ± 0,2

Technical data/mechanical performances

Test/performance	Test conditions		Requirement
	Temperature (°C)	Conditions	
Leakage	23	> 16 bar	no leakage
Hydrostatic	23	> 40 bar	no leakage
Static Vacuum	23	-0,9 bar	no leakage
Cyclic Vacuum	23	250.000 cycles between 0 and -0,9 bar	no leakage
Sustained Pressure	23	1, 10, 100, 1000, 2000 h pressure test	no leakage
Crush Resistance	23	40% OD compression	no visible damage and no leakage
Pipe Bending	23 / -30°C	12 x DN	no leakage
Ball Impact	23 and -30°C	0,5 kg from 1,8 meters	no visible damage and no leakage
Puncture Resistance	23	75 N for 60 min	no visible damage and no leakage

1.4. Base materials/ancillary materials

Material		Pipe (CG)	Fittings (BA)
Polyethylene granulate	Base	63-100%	99-100%
EVOH/PA/PVDF granulate	Base	0-31%	0%
Tie layers	Base	0-10%	0%
Pigments for PE/EVOH/PA/PVDF	Ancillary	0-0,5%	0-1%
TOTAL		100%	100%

1.5. Description of piping system components

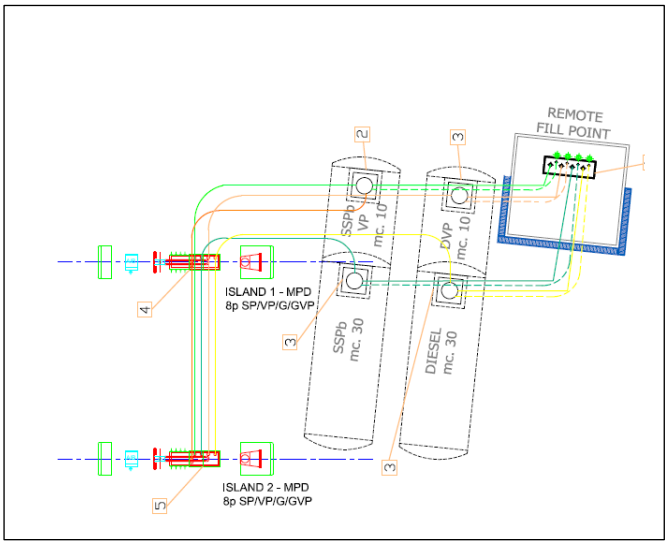

The environmental burdens are calculated in relation to the functional unit, which resulted for a standard representative city service station with two fuel storage tanks and two distribution islands.

Main Smartflex piping system components in the installation are:

Smartflex pipes - Single wall pipes for vent, vapour and fill lines, double wall pipes for product lines; supplied in 5,8 meters straight length or 50 meters or 75 meters coils.

Smartflex single wall and double wall electrofusion fittings (elbows, reducers, tees…) and Smartflex fittings with metal (brass) insert (transition fittings) and aluminium flanges with suitable gaskets.

The functional unit represents a typical example of service station with all the facilities clearly positioned.

The EPD is declared as the average environmental performance for NUPI piping systems type Smartflex and Supersmartflex for the conveyance of fuels, over its reference service life cycle of 30 years (being the estimated reference life time of the service station), in accordance with EN 14125, UL 971, KIWA BRL-552, Institute of Petroleum 2nd ED and APEA Blue Book.

Pipes included are Smartflex EN pipe DN 50 mm double wall (product pipe), Smartflex EN pipe single wall DN 63 mm (vent pipe), Supersmartflex UL pipe single wall DN 63 mm (vapour recovery pipe) and Supersmartflex UL pipe single wall DN 90 mm (fill pipe).

No other components (tank, sumps, covers and pumps) have been included.

1.6. Products Distribution

Pipes and fittings are supplied to customers in customised dimensions with appropriate protection and packaging. The product packaging is made of cardboard boxes, wooden pallets and crates, plastic sheaths, stretch film and bags.

Installation

Water, sand and electricity are used during installation. No emissions are generated during installation and piping systems installations do not cause health or environmental hazards.

Functional unit

The functional unit is defined as "The conveyance of liquid fuel from the delivery tanker to the underground tank (fill lines), from the tank to the dispensers (product lines) and the conveyance of vapor fuels from the dispenser back to the tank (vapour lines) and from the storage tank to the atmosphere (vent lines), of a well-defined service station by means of Smartflex piping installation supplying a service station with two storage tanks and two islands/four dispensers, one remote fill point and one vent point.
The service lifetime of the piping system has been considered to be aligned with the 30- year service lifetime of the service station".

Name	Value	Unit
Reference flow	**272,725**	**Kg/FU**
Smartflex plastic pipes	196,386	Kg/FU
Smartflex plastic fittings	**54,118**	**Kg/FU**
Total plastic	250,539	Kg/FU
Brass	**10,348**	**Kg/FU**
Aluminium flanges	9,400	Kg/FU
Cu-Ni alloy	2,007	Kg/FU
Viton o-rings	0,036	Kg/FU
Flexoid gaskets paper	0,431	Kg/FU
Total Metal	**21,755**	**Kg/FU**

Conversion factor to 1 kg	0,0036667	
Conversion factor to 1 m	0,0069498	
Total pipes length	143,890	m

Dangerous materials
The product does not contain any substances included in the "Candidate List of Substances of Very High Concern for Authorization" compliant with /REACH/ and with EC 1272/2008 with the sole exception of brass components in which Lead, with a concentration below 3% w/w, is present.

The total mass involved is 272,73 kg of which 196,39 kg of plastic pipes, 54,12 kg of plastic fittings and 21,76 kg of metal components, 0,04 kg of Viton O-rings and 0,43 kg of Flexoid gaskets paper.

Condition of use:

Operational use (pumping energy) is not relevant for the EPD, since it falls outside the system boundaries of the LCA project. Maintenance is not needed for the Smartflex and Supersmartflex pipe system. According to FprEN16903 a general scenario of zero impact for buried plastic piping systems is considered.

Reference service life

Smartflex piping systems for petrol filling stations are regarded as having 30 years RSL (as per EN14125 or UL971 product standard).

End of life

After the demolition and deconstruction phase, Smartflex and Supersmartflex piping systems can be incinerated, sent to landfill or recycled.

LCA results – Environmental impact per functional unit

The tables below show the results of the SMARTFLEX AND SUPERSMARTFLEX LCA (Life Cycle Assessment).

ENVIRONMENTAL IMPACTS																
Parameter	**Unit**	**A1-3**	**A4**	**A5**	**B1**	**B2**	**B3**	**B4**	**B5**	**B6**	**B7**	**C1**	**C2**	**C3**	**C4**	**D**
GWP	**[kg CO2-eq.]**	9,48E+02	4,40E+01	3,94E+02	0	0	0	0	0	0	0	1,55E-01	1,36E+00	2,40E+01	0,00E+00	-5,54E+01
ODP	**[kg CFC11-eq.]**	7,37E-06	7,55E-15	1,43E-07	0	0	0	0	0	0	0	4,63E-15	2,22E-16	1,12E-14	0,00E+00	3,35E-12
AP	**[kg SO2-eq.]**	1,97E+00	8,86E-01	2,62E+00	0	0	0	0	0	0	0	3,25E-04	1,02E-03	6,11E-03	0,00E+00	-8,63E-02
EP	**[kg (PO4)^3--eq.]**	2,03E-01	9,59E-02	5,23E-01	0	0	0	0	0	0	0	3,60E-05	2,05E-04	1,24E-03	0,00E+00	-1,04E-02
POCP	**[kg ethene-eq.]**	2,99E-01	4,67E-02	2,24E-01	0	0	0	0	0	0	0	2,32E-05	1,94E-05	6,50E-04	0,00E+00	-1,38E-02
ADPE	**[kg Sb-eq.]**	1,69E-02	2,23E-06	3,87E-05	0	0	0	0	0	0	0	5,18E-08	1,12E-07	1,15E-06	0,00E+00	-9,86E-05
ADPF	**[MJ]**	2,63E+04	5,60E+02	5,28E+03	0	0	0	0	0	0	0	1,72E+00	1,84E+01	3,78E+01	0,00E+00	-1,33E+03
Caption	GWP = Global warming potential; ODP = Ozone depletion potential; AP = Acidification potential; EP = Eutrophication potential; POCP = Photochemical ozone creation potential; ADPE = Abiotic depletion potential for non fossil resources; ADPF = Abiotic depletion potential for fossil resources															

LCA results – Environmental impact per functional unit - TRACI

TRACI Indicators																
Parameter	**Unit**	**A1-3**	**A4**	**A5**	**B1**	**B2**	**B3**	**B4**	**B5**	**B6**	**B7**	**C1**	**C2**	**C3**	**C4**	**D**
Global Warming Air	**[kg CO2-eq.]**	9,48E+02	4,40E+01	3,94E+02	0	0	0	0	0	0	0	1,55E-01	1,36E+00	2,40E+01	0,00E+00	-5,54E+01
Ozone Deplation Air	**[kg CFC11-eq.]**	1,25E-07	7,55E-15	2,41E-09	0	0	0	0	0	0	0	4,63E-15	2,22E-16	9,35E-15	0,00E+00	3,37E-12
Acidification Air	**[kg SO2-eq.]**	2,04E+00	9,44E-01	3,28E+00	0	0	0	0	0	0	0	3,40E-04	1,13E-03	7,20E-03	0,00E+00	-9,22E-02
Eutrophication	**[kg N - eq.]**	1,24E-01	3,37E-02	2,07E-01	0	0	0	0	0	0	0	3,17E-05	1,51E-04	8,79E-04	0,00E+00	-6,73E-03
Smog Air	**[kg O_3-eq.]**	3,15E+01	1,80E+01	9,43E+01	0	0	0	0	0	0	0	4,51E-03	1,81E-02	1,34E-01	0,00E+00	-1,63E+00

LCA results – Resource use per functional unit

RESOURCE USE																
Parameter	**Unit**	**A1-3**	**A4**	**A5**	**B1**	**B2**	**B3**	**B4**	**B5**	**B6**	**B7**	**C1**	**C2**	**C3**	**C4**	**D**
PERE	**[MJ]**	2,37E+03	1,36E+01	3,07E+02	0	0	0	0	0	0	0	1,23E+00	1,04E+00	5,50E+00	0,00E+00	-1,61E+02
PERM	**[MJ]**	1,82E+02	0	-1,53E+01	0	0	0	0	0	0	0	0	0	0	0	0
PERT	**[MJ]**	2,55E+03	1,36E+01	2,92E+02	0	0	0	0	0	0	0	1,23E+00	1,04E+00	5,31E+00	0,00E+00	-1,61E+02
PENRE	**[MJ]**	1,51E+04	5,62E+02	5,63E+03	0	0	0	0	0	0	0	2,78E+00	1,85E+01	3,44E+02	0,00E+00	-1,44E+03
PENRM	**[MJ]**	1,20E+04	0	-3,25E+02	0	0	0	0	0	0	0	0	0	-2,99E+02	0	0
PENRT	**[MJ]**	2,72E+04	5,62E+02	5,31E+03	0	0	0	0	0	0	0	2,78E+00	1,85E+01	4,50E+01	0,00E+00	-1,44E+03
SM*	**[kg]**	0	0	0	0	0	0	0	0	0	0	0	0	0	0	6,23E+00
RSF	**[MJ]**	0,00E+00	0,00E+00	0,00E+00	0	0	0	0	0	0	0	0	0,00E+00	0,00E+00	0,00E+00	0,00E+00
NRSF	**[MJ]**	0,00E+00	0,00E+00	0,00E+00	0	0	0	0	0	0	0	0,00E+00	0,00E+00	0,00E+00	0,00E+00	0,00E+00
FW	**[m3]**	5,85E+00	1,66E-02	4,46E-01	0	0	0	0	0	0	0	1,42E-03	1,20E-03	5,83E-02	0,00E+00	-2,68E-01
Caption	PERE = Use of renewable primary energy excluding renewable primary energy resources used as raw materials; PERM = Use of renewable primary energy resources used as raw materials; PERT = Total use of renewable primary energy resources; PENRE = Use of non renewable primary energy excluding non renewable primary energy resources used as raw materials; PENRM = Use of non renewable primary energy resources used as raw materials; PENRT = Total use of non renewable primary energy resources; SM = Use of secondary material; RSF = Use of renewable secondary fuels; NRSF = Use of non renewable secondary fuels; FW = Use of net fresh water															

** Reference to only foreground system.*
***INA: Indicator not assessed*

LCA results – Output flows and waste categories per functional unit

OUTPUT FLOWS AND WASTE CATEGORIES																
Parameter	**Unit**	**A1-3**	**A4**	**A5**	**B1**	**B2**	**B3**	**B4**	**B5**	**B6**	**B7**	**C1**	**C2**	**C3**	**C4**	**D**
HWD	**[kg]**	3,16E-05	1,01E-05	2,27E-04	0	0	0	0	0	0	0	1,15E-09	8,60E-07	2,39E-08	0,00E+00	-4,93E-07
NHWD	**[kg]**	4,74E+01	6,98E-02	2,14E+01	0	0	0	0	0	0	0	1,97E-03	2,83E-03	1,04E+00	0,00E+00	-1,06E+00
RWD	**[kg]**	3,25E-01	7,85E-04	1,31E-02	0	0	0	0	0	0	0	4,22E-04	2,29E-05	2,80E-03	0,00E+00	-4,47E-02
CRU*	**[kg]**	4	0	0	0	0	0	0	0	0	0	0	0	0	0	0
MFR*	**[kg]**	0	0	7,98E+00	0	0	0	0	0	0	0	0	0	6,01E+00	0	0
MER*	**[kg]**	0	0	0	0	0	0	0	0	0	0	0	0	0	0	0
EEE	**[MJ]**	0	0	4,25E+01	0	0	0	0	0	0	0	0	0	4,42E+01	0	0
EET	**[MJ]**	0	0	8,49E+01	0	0	0	0	0	0	0	0	0	7,90E+01	0	0
Caption	HWD = Hazardous waste disposed; NHWD = Non hazardous waste disposed; RWD = Radioactive waste disposed; CRU = Components for re-use; MFR = Materials for recycling; MER = Materials for energy recovery; EEE = Exported electrical energy; EET = Exported thermal energy															

* *Reference to only foreground system.*

Calculation rules

Assumptions

Where possible, a conservative approach has been adopted, overestimating burdens to prove irrelevance. In other cases, alternatives data were selected based on scientific experience, in order to improve the accuracy of the model. Where it was not possible to know the exact materials composition in the supply chain (due to commercial or industrial confidential suppliers' reasons or due to missing datasets), these have been approximated with LCIs of similar materials, estimated by the combination of available dataset or reconstructed with literature data.

1. For brass recycling, the steel billet recycling process has been used as a conservative choice (melting temperature for recycling brass is higher than for steel).
2. Where potential benefits from energy recovery in A5 and C modules are considered, the grid mix of non European countries has been considered as the European one.
3. For boilers (natural gas fed) an efficiency factor equal to 0,95 is considered.
4. Wastes coming from extraordinary maintenance activities have not been considered.
5. For mixed packaging wastes the production impact is taken into account but as it is mainly made of polyethylene, the polyethylene production is considered.
6. Auxiliaries used in installations are assumed to be sent to landfill at the end of life of the product.
7. The functional unit is defined as mass of pipes and fittings without packaging.
8. Some components produced by third party companies arrive at NUPI with their own packaging. This packaging is not accounted for in this study.

Cut off rules

EN 15804 requires that where there are data discrepancies or insufficient input data for a unit process, the cut-off criteria shall be 1% of renewable and non-renewable primary energy usage and 1% of the total mass of this unit process. The total neglected flows from a product stage must be no more than 5% of product inputs by mass or 5% of primary energy contribution.

Only nylon strips for some fitting packaging and ozone emissions have been ignored as widely < 1% of the total mass.

Data quality

The data quality can be considered as good. The LCA models have been checked and most relevant flows were considered. Technological, geographical and temporal representativeness is appropriate.

Examination period

Primary data collected in the context of this study refer to 2019.

Allocation – upstream data

In general, the allocation principles used in standard GaBi datasets are explained within GABI 9 2019 DOCUMENTATION.

For all refinery products, allocation by mass and net calorific value has been applied. The specific manufacturing route of every refinery product is modelled and so the impacts associated with the production of these products are calculated individually. Two allocation rules are applied:

1. the raw material (crude oil) consumption of the respective stages, which is necessary for the production of a product or an intermediate product, is allocated by energy (mass of the product * calorific value of the product);

2. the energy consumption (thermal energy, steam, electricity) of a process, e.g. atmospheric distillation, being required by a product or an intermediate product, are charged on the product according to the share of the throughput of the stage (mass allocation).

Materials and chemicals needed used in the manufacturing process are modelled using the allocation most suitable rule for the respective product. For further information on a specific product, see the documentation on gabi-software.com.

In addition to the abovementioned allocation methods for refinery products and materials, inventories for electricity and thermal energy generation also include allocation by economic value for some by-products (e.g. gypsum, boiler ash and fly ash). In case of plants for the co-generation of heat and power, allocation by exergy is applied.

- Module A1 refers to all raw materials impacts production with packaging included and all types of energy inputs

- Module A2 includes the raw materials (also auxiliary's and packaging) transport to the factory gate
- Module A3 comprises all production activities and waste treatment and process emissions (both to air and to water). Such activities refer to NUPI Industrie Italiane S.p.A. direct activities. Primary data have been used for (such as plastic extrusion for pipes production, plastic injection moulding for fittings production) and processes not directly carried out by NUPI Industrie Italiane S.p.A such as the brass inserts production but included in the study as requested in the functional unit. (secondary data have been used in this case).
- Module A4 takes into account the transport to the final customer/distributor. In 2019, Smartflex and Supersmartflex piping system was sold in Europe (41%), in Asia (34%), in Africa (11%) in Oceania (8%) and in USA (6%). The distribution scenario is shown below:

Means of transport	GaBi transport dataset	Weighted Average distance [km]
Truck	Truck-trailer, Euro 6, up to 28t gross weight / 12,4t payload capacity	661,86
Ship	Average ship, 1500t payload capacity/ canal	7248,06

- For Module A5 the following parameters (TEPPFA reference) have been taken into account:

Parameter	Parameter unit expressed per functional unit	Source
Backfilling sand	17,11 m^3	/Recalculated by using TEPPFA EPD,2017/*
Mechanical energy	1653 MJ (excavating, backfilling and vibrating)	/Recalculated by using TEPPFA EPD,2017/*
Soil transported away	17,66 m^3	/Recalculated by using TEPPFA EPD,2017/*
Leftover	2%	/TEPPFA EPD, 2017/

*: The value has been recalculated taking into account a wide embankment area covering the entire pipe layout of 230 mq with a depth of cover of 0,5 m. A 50% of suitable native soil reuse has been considered and the other 50% has been considered to be transported away.

Moreover, following leftover end of life scenarios have been included:

	Landfill	Incineration	Mechanical recycling	Source
Leftover	80 %	15 %	5 %	/TEPPFA EPD, 2017/
Distance to treatment	50 km	150 km	600 km	/TEPPFA EPD, 2017/

- Module B (maintenance and operational use): Operational use and Maintenance are not relevant for the piping system. According to FprEN 16903 a general scenario of zero impact for buried plastic piping systems is considered for all B modules (B1-B2-B3-B4-B5-B6-B7).
- Module C1 (Deconstruction / demolition) has been included and deconstruction impacts have been considered.
- Module C2, C3 (recycling and incineration with energy recovery) and C4 (landfilling) consider the end of life scenarios of the product, considering all components of the piping system. The percentages to the given scenarios have been suggested by the TEPPFA EPD, 2017 and FprEN 16903 as shown below:

Material	EoL treatment – /FprEN 16903/	Distances to treatment [C2] /TEPPFA EPD, 2017/
Piping systems	95% left in ground 2,5% incineration 2,5% mechanical recycling	150 km to incineration 600 km to recycling

- Module D consists of loads and benefits beyond the system boundaries.

Other additional environmental information

Emissions to indoor air:

No direct emissions at the construction site. Nupi Industrie Italiane S.p.A confirms that the Smartflex and Supersmartflex piping system does not contain any substances mentioned on the REACH-list, with the sole exception of brass components in which Lead, with a concentration below 3% w/w, is present.

Emissions to soil and water:

No direct emissions at the construction site. Nupi Industrie Italiane S.p.A confirms that the Smartflex and Supersmartflex piping system does not contain any substances mentioned on the REACH-list, with the sole exception of brass components in which Lead, with a concentration below 3% w/w, is present.

References

ISO 14040:2006 Environmental management - Life cycle assessment - Principles and framework

ISO 14044:2006 Environmental Management – Life Cycle Assessment – Requirements and Guidelines.

ISO 14025:2011-10, Environmental labels and declarations - Type III environmental declarations - Principles and procedures.

EN 15804:2012+A1:2013: Sustainability of construction works — Environmental product declarations — Core rules for the product category of construction products. Brussels: European Committee for Standardization.

GaBi LCA Database Documentation. Retrieved from Sphera: http://www.gabisoftware.com/international/databases/gabi-databases/

PCR ICMQ001/15-rev 2.1 Product Category Rules "Prodotti da costruzione e servizi per costruzioni" (Building-Related Products and Services) – ICMQ-001/15- rev.2.1

GABI 9 2019 DOCUMENTATION GaBi 9: Documentation of GaBi8-Datasets for life cycle engineering. LBP University of Stuttgart and PE INTERNATIONAL AG, 2019. http://www.gabi-software.com/international/index/

FprEN 16903:2017 (E) – Plastics piping systems - Environmental product declarations - Product Category Rules complementary to EN 15804, for buried plastics piping systems, 2017

REACH Registration, Evaluation, Authorization and Restriction of Chemicals

EN 14125:2013 - Thermoplastic and Flexible Metal Pipework for Underground Installation at Petrol Filling Stations

UL 971:2006 - Non metallic Underground Piping for Flammable Liquids

IP second ED: 2001 - The Institute of Petroleum- Performance Specification for Underground Pipework Systems at Petrol Filling Station

APEA Blue Book: 2018 - Guidance for Design, Construction, Modification, Maintenance and Decommissioning of Filling Stations

NFPA 30:2021 - Flammable and Combustible Liquids Code

TEPPFA EPD Polyethylene (PE) pipe system for water distribution, 2017